TEKA

BE LINEA R15 / RS15
TOPLINE R15 / RS15
FLEXLINEA RS15

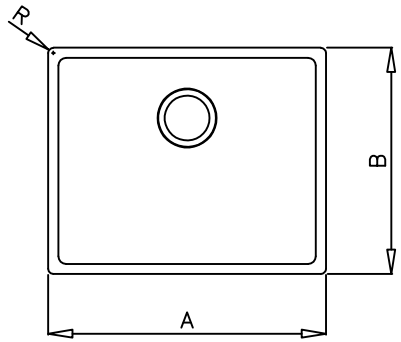

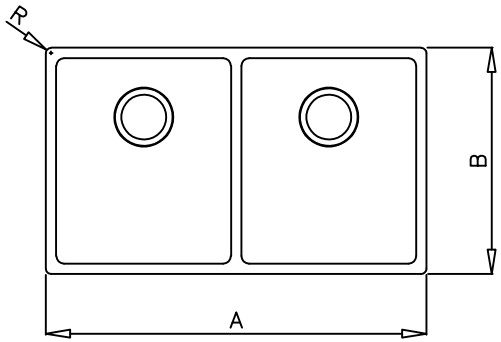

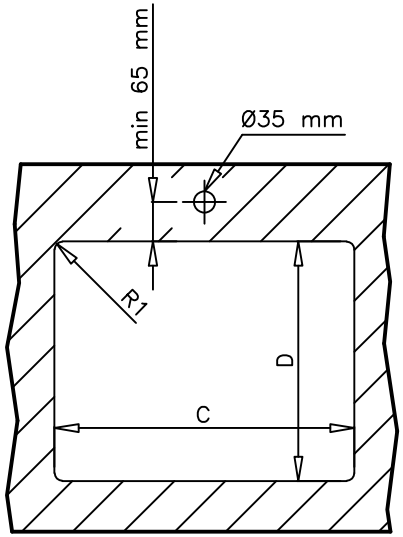



	A	B	R	C	D	R1
BE LINEA R15 / RS15 18.40	220	440	10	176	396	13
BE LINEA R15 / RS15 27.40 FLEXLINEA RS15 27.40	310	440	10	266	396	13
BE LINEA R15 / RS15 34.40 FLEXLINEA RS15 34.40	380	440	10	336	396	13
BE LINEA R15 / RS15 40.40 FLEXLINEA RS15 40.40	440	440	10	396	396	13
BE LINEA R15 / RS15 45.40 FLEXLINEA RS15 45.40	490	440	10	446	396	13
BE LINEA R15 / RS15 50.40 FLEXLINEA RS15 50.40	540	440	10	496	396	13
BE LINEA R15 / RS15 71.40 FLEXLINEA RS15 71.40	750	440	10	706	396	13
BE LINEA R15 / RS15 2C / 2B 580 FLEXLINEA RS15 2C / 2B 580	580	440	10	536	396	13
BE LINEA R15 / RS15 2C / 2B 740 FLEXINEA RS15 2C / 2B 740	740	440	10	696	396	13
BE LINEA R15 / RS15 2C / 2B 860 FLEXLINEA RS15 2C / 2B 860	860	440	10	816	396	13

BE LINEA R15 / RS15

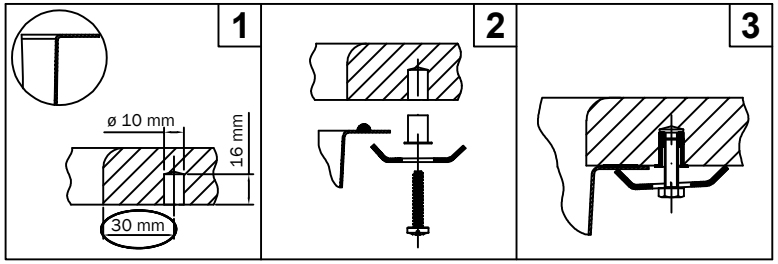

FLEXLINEA RS15

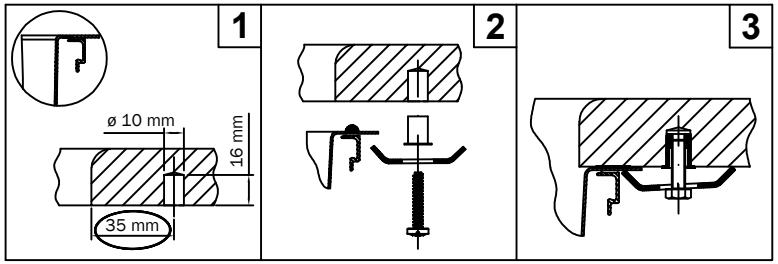

BE LINEA R15 / RS15
TOPLINE R15 / RS15
FLEXLINEA RS15

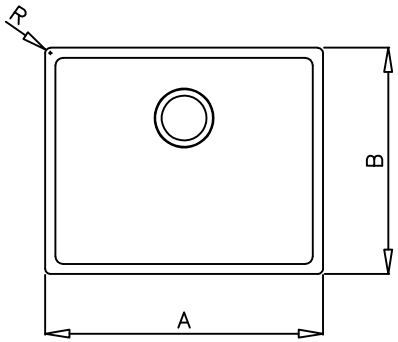

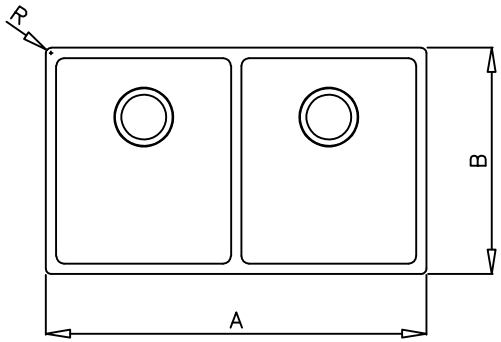

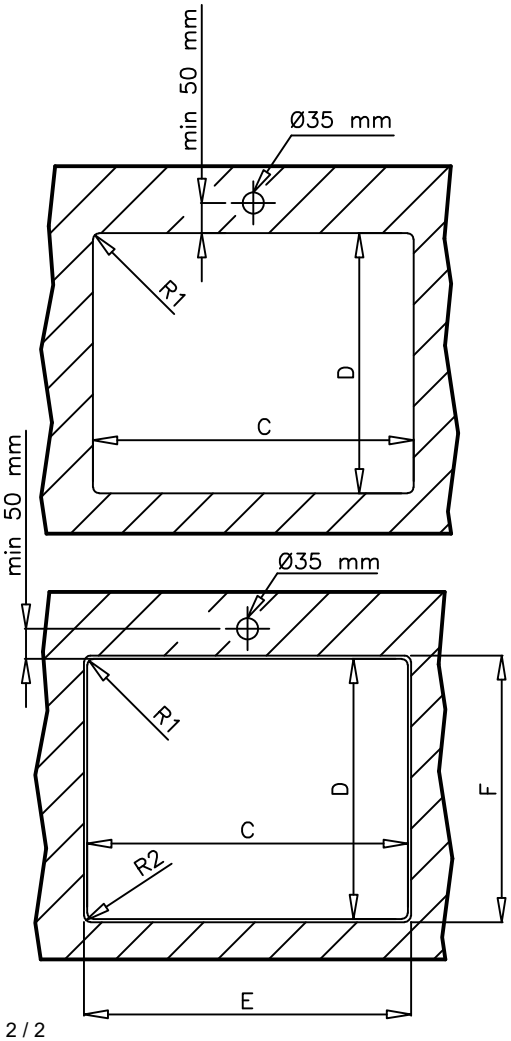

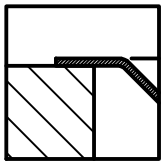

	A	B	R	C	D	R1
TOPLINE R15 / RS15 27.40 FLEXLINEA RS15 27.40	310	440	10	300	430	10
TOPLINE R15 / RS15 34.40 FLEXLINEA RS15 34.40	380	440	10	370	430	10
TOPLINE R15 / RS15 40.40 FLEXLINEA RS15 40.40	440	440	10	430	430	10
TOPLINE R15 / RS15 45.40 FLEXLINEA RS15 45.40	490	440	10	480	430	10
TOPLINE R15 / RS15 50.40 FLEXLINEA RS15 50.40	540	440	10	530	430	10
TOPLINE R15 / RS15 71.40 FLEXLINEA RS15 71.40	750	440	10	740	430	10
TOPLINE R15 / RS15 2C / 2B 580 FLEXLINEA RS15 2C / 2B 580	580	440	10	570	430	10
TOPLINE R15 / RS15 2C / 2B 740 FLEXLINEA RS15 2C / 2B 740	740	440	10	730	430	10
TOPLINE R15 / RS15 2C / 2B 860 FLEXLINEA RS15 2C / 2B 860	860	440	10	850	430	10

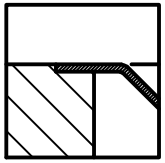

	A	B	R	C	D	R1	E	F	R2
TOPLINE R15 / RS15 27.40 FLEXLINEA RS15 27.40	310	440	10	300	430	10	311	441	10,5
TOPLINE R15 / RS15 34.40 FLEXLINEA RS15 34.40	380	440	10	370	430	10	381	441	10,5
TOPLINE R15 / RS15 40.40 FLEXLINEA RS15 40.40	440	440	10	430	430	10	441	441	10,5
TOPLINE R15 / RS15 45.40 FLEXLINEA RS15 45.40	490	440	10	480	430	10	491	441	10,5
TOPLINE R15 / RS15 50.40 FLEXLINEA RS15 50.40	540	440	10	530	430	10	541	441	10,5
TOPLINE R15 / RS15 71.40 FLEXLINEA RS15 71.40	750	440	10	740	430	10	751	441	10,5
TOPLINE R15 / RS15 2C / 2B 580 FLEXLINEA RS15 2C / 2B 580	580	440	10	570	430	10	581	441	10,5
TOPLINE R15 / RS15 2C / 2B 740 FLEXLINEA RS15 2C / 2B 740	740	440	10	730	430	10	741	441	10,5
TOPLINE R15 / RS15 2C / 2B 860 FLEXLINEA RS15 2C / 2B 860	860	440	10	850	430	10	861	441	10,5

